WEIR

MATERIALS & FOUNDRIES

PARK WORKS, NEWTON HEATH,
MANCHESTER M40 2BA

Materials
Tel: 0161 954 4678
Fax: 0161 954 4739

Foundries
Tel: 0161 954 4347
Fax: 0161 205 2455

# The use of ZERON 100 super duplex stainless steel in the fabrication of thick walled pressure vessels

G. Warburton, M. Spence and A.W. Stevenson

DUPLEX STAINLESS STEELS '91

28-30 OCTOBRE 1991 BEAUNE
BOURGOGNE, FRANCE

Volume 2

Edited by:
J. CHARLES - S. BERNHARDSSON

les éditions de physique

Avenue du Hoggar,
Zone Industrielle de Courtaboeuf,
B.P. 112,
F-91944 Les Ulis Cedex A, France

Weir Materials & Foundries is a division of Weir Pumps Ltd
Registered in Scotland - Number 33381 Registered Office:- 149 Newlands Road, Glasgow G44 4EX

# The use of ZERON 100 super duplex stainless steel in the fabrication of thick walled pressure vessels

G. Warburton, M. Spence and A.W. Stevenson

DUPLEX STAINLESS STEELS '91

28-30 OCTOBRE 1991 BEAUNE
BOURGOGNE, FRANCE

Volume 2

Edited by:
J. CHARLES - S. BERNHARDSSON

les éditions de physique

Avenue du Hoggar,
Zone Industrielle de Courtaboeuf,
B.P. 112,
F-91944 Les Ulis Cedex A, France

# The use of ZERON 100 super duplex stainless steel in the fabrication of thick walled pressure vessels

G. Warburton, M. Spence and A.W. Stevenson

*Weir Materials Limited, Manchester*

## 1. Synopsis.

A project to manufacture an experimental pressure vessel using all the design manufacturing and inspection procedures for a full sized vessel in a super duplex stainless steel ZERON 100, was undertaken jointly by Weir Materials Limited and Marathon Oil UK Limited in conjunction with a renowned vessel fabricator, Whessoe.

The project was to develop and qualify all the procedures needed to manufacture a vessel and provide all the necessary data for design purposes and hence assess weight savings against fabrication costs when compared against conventional materials of construction.

The vessel was fully non-destructively tested and all necessary procedures for dye-penetrant, ultrasonic and radiography were developed and utilised on the finished vessel.

The paper describes the construction of the vessel, the data and techniques generated by the project and assesses the commercial viability of future applications.

## 2. Introduction.

The project was to evaluate the feasibility of manufacturing methods, provide design data and confirm design philosophy and look at the commerical implications against traditional materials of manufacture. The driving force to use the superior tensile properties of the super duplex stainless steel over traditional materials was to save weight. The project was to define and offset the extra cost of the super duplex material by reducing the fabrication costs over the lesser mechanical properties of the traditional clad materials by achieving minimum wall thickness.

## 3. Duplex vessel experience.

After review and discussion with a large number of fabricators in the UK and on the Continent, specialising in supply and manufacture of pressure vessels, it was found that no experience of fabricating super duplex vessels existed and very little experience of standard duplex vessels (UNS S31803).

With standard duplex vessels, limited wall thicknesses had been manufactured to date and only two references were found for large size vessels [1, 2, 6].

These references showed that due care and consideration had to be realised for manufacturing the vessel and control of parameters during construction to achieve the required properties of the finished vessel but that it is possible to fabricate large structures from these materials in thinner sections.

## 4. Design.

It is only recently that duplex stainless steels have achieved formal recognition by inclusion in pressure vessel codes. ASME VIII division 1 and AD-Merkblatter include UNS S31803 and Werkstoff number 1.4462 respectively as permitted construction steels.

The advantages of lower weight and potential cost savings can be highlighted by comparing design calculations for a hypothetical crude oil separator constructed using the following alternative materials.

1) Carbon manganese steel (normalised and tempered) with corrosion resistant overlay - BS1501-224-490B.
2) Carbon manganese steel (quenched and tempered) with corrosion resistant overlay.
3) 25Cr super duplex stainless steel - ZERON 100.

Table 1 details the design stress for the three candidate materials for both BS5500 and ASME VIII.

Assuming pressure of 115 bar and temperature of 110°C, Table 2 summarises design calculations for wall thickness.

The percent weight savings when using ZERON 100 are listed in Table 3.

The percent weight savings are significant and represent substantial fabrication cost savings.

The preferred route is to use BS5500. The allowable design stresses for ZERON 100 are obtained by using Appendix K of BS5500. Test programmes have established realistic minimum property requirements for ZERON 100 ensuring that a high level of confidence can be placed in the derivation of the allowable design stresses. In the case of ASME VIII design stresses are established using a more conservative criterion. This results in the use of lower design stresses with increase in thickness and hence weight of the pressure vessel.

Table 1. — *Design stresses.*

| | DESIGN STRESS (MPa) | |
|---|---|---|
| MATERIAL | BS5500 | ASME VIII |
| BS1501-224-490B | 183.8 | 122.5 |
| QUENCH AND TEMPERED CARBON MANGANESE STEEL | 255.3 | 139.3 |
| ZERON 100 | 297.8 | 153.5 |

Table 2. — *Wall thickness.*

| BASIC WALL THICKNESS (mm) | | | | | | |
|---|---|---|---|---|---|---|
| DESCRIPTION | SHELL WALL THK | | | DISH WALL THK | | |
| | C Mn STEEL | Q & T | Z100 | C Mn STEEL | Q&T | Z100 |
| 1ST STAGE SEPARATOR VX0101X | 127 | 90 | 90 | 59 | 49 | 40 |
| 2ND STAGE SEPARATOR VX0102X | 68 | 53 | 43 | 76 | 58 | 45 |
| 3RD STAGE SEPARATOR VX0103X | 18 | 15 | 10 | 21 | 11 | 8 |
| TEST SEPARATOR VX0104X | 102 | 75 | 65 | 50 | 39 | 32 |
| J/T SEPARATOR VX0105X | 71 | 53 | 47 | 76 | 55 | 50 |
| NOTE 1) Calculations inlude for:- a) Basic wall thickness no allowance made for nozzle compensation checks or external nozzle loads | | | | | | |

## 5. Methods of manufacture.

The full size pressure vessel was manufactured utilising the standard production techniques used for manufacturing a non-ZERON 100 pressure vessel. The actual dimensions of the pressure vessel that was manufactured are given in Ap-

Table 3. — *Percent weight savings.*

| DESCRIPTION | WEIGHT OF VESSEL (TONNES) | | | | |
|---|---|---|---|---|---|
| | C Mn STEEL | Q & T | % SAVING | 2100 | % SAVING |
| 1ST STAGE SEPARATOR VX0101X | 164.3 | 121.6 | 25.99 | 117.8 | 28.3 |
| 2ND STAGE SEPARATOR VX0102X | 72.3 | 57.5 | 20.47 | 45.3 | 37.34 |
| 3RD STAGE SEPARATOR VX0103X | 28.0 | 23.3 | 16.79 | 17.8 | 36.43 |
| TEST SEPARATOR VX0104X | 87.4 | 72.4 | 17.16 | 62.9 | 28.03 |
| J/T SEPARATOR VX0105X | 60.0 | 44.2 | 26.33 | 41.5 | 30.83 |

pendix 1. The final fabrication weight was 5.2 tonnes.

### 5.1 Forming.

5.1.1 *Dished End.* — The hemispherical dished end was manufactured from two plates welded together with the weld seam across the centre. The component being manufactured by Cerec, Northern France. The weld seam was used only as this simulated the manufacturing method for a larger size vessel.

Welding parameters were established for the weld seam which was then radiographed in accordance with BS5500 both before and after the hot forming operation.

The welding procedure used for welding of the two plates can be seen in table 4. After fabrication the properties of the weld seam were assessed. This data can be seen as weld test plate number 4 (weld no 12) in table 13.

The sequence of operations is demonstrated in figure 1.

The forming operation consisted of heating to 1150°C, part forming down to a minimum temperature of 1050°C and reheating a total of 3 forming steps were required. Immediately after forming the dished end was placed into a hot furnace set at 1120°C for heat treatment and subsequent quenching. Dimensionally the dished end was within tolerance after slight cold calibration.

### 5.2 Shell.

The plates were cut and a satisfactory edge prepared by plasma cutting prior to rolling of the shell. The process presented no problem with grinding of 2-3mm

Table 4. — *Details of welding parameters.*

| WELD NO | POSITION | PROCESS | DIA mm | MAXIMUM Ti °C | TRAVEL SPEED cm/min | HEAT INPUT KJ/mm |
|---|---|---|---|---|---|---|
| WELD 1 | ROOT | GMAW | 4.5 | 73 | N/A | |
| | FILL | SAW | 2.4 | 150 | 32-38 | 1.69-1.91 |
| | CAP | SAW | 2.4 | 140 | | 1.69-1.91 |
| WELD 1 REPAIR | ROOT | SMAW | 4.0 | 41 | | 1.13 |
| | FILL | SMAW | 5.0 | 144 | | 1.11-1.76 |
| | CAP | SMAW | 5.0 | 145 | | 1.19 |
| CIRC WELD WELD NO 3 INSIDE | ROOT PASS | SMAW | 4.0 | 60 | | 1.28 |
| | FILL | SMAW | 5.0 | 105 | | 1.17 |
| | CAP | SMAW | 5.0 | 67 | | 1.42 |
| CIRC WELD OUT-SIDE | ROOT | SMAW | 4.0 | 104 | | 1.52 |
| | FILL | SAW | 2.4 | 165 | 35-40 | 1.2-1.3 |
| | CAP | SAW | 2.4 | 152 | 35 | 1.2-1.3 |
| CIRC WELD INSIDE (20mm) | CAP | GTAW | 2.4 | 65 | N/A | 1.68 |
| | FILL | GTAW | 2.4 | 116 | N/A | 1.54 |
| | ROOT | GTAW | 2.4 | 122 | N/A | 1.83 |
| WELD NO 2 | ROOT | SMAW | 4.5 | 55 | N/A | 1.92 |
| | FILL | SAW | 2.4 | 151 | 32-39 | 1.66-1.89 |
| | CAP | SAW | 2.4 | 149 | 36-41 | 1.49-1.83 |
| WELD NO 4 | ROOT | SMAW | 3.25 | 45 | | 1.87 |
| | FILL | SMAW | 4.05 | 81 | 1.60-1.88 | 1.71 |
| | CAP | SMAW | 5.0 | 72 | 1.74 | 1.74 |

| WELD NO | POSITION | PROCESS | DIA mm | MAXIMUM Ti °C | TRAVEL SPEED cm/min | HEAT INPUT KJ/mm |
|---|---|---|---|---|---|---|
| 5 | ROOT | SMAW | 3.25 | 67 | N/A | 1.40 |
| | FILL | SMAW | 4.5 | 137 | N/A | 1.55 |
| | CAP | SMAW | 5.0 | 128 | N/A | 1.35 |
| 6 | ROOT | GTAW | 1.6 | 40 | N/A | |
| | FILL | SMAW | 3.25 | 102 | N/A | 1.0 |
| | CAP | SMAW | 3.25 | 72 | N/A | 1.31 |
| 7 | 10MM LEG LENGTH | GMAW | 1.2 | 48 | N/A | |
| | FILLET | | | | | |
| 8 | 6MM LEG LENGTH | SMAW | 4.0 | 139 | N/A | 1.15 |
| | FILLET | | | | | |
| 9 | ROOT | SMAW | 3.25 | 60 | N/A | 1.54 |
| | FILL | SMAW | 4.5 | 87 | N/A | 1.02 |
| | CAP | SMAW | 4 | 107 | N/A | 1.20 |
| 10 | ROOT | SMAW | 4.0 | 51 | N/A | 1.48 |
| | FILL | SMAW | 4.5 | 120 | N/A | 1.36 |
| | CAP | SMAW | 5.0 | 83 | N/A | 1.41 |
| 11 | ROOT | SMAW | 4.5 | 60 | N/A | |
| | FILL | GMAW | 2.4 | 154 | 33-47 | 1.60-1.88 |
| | CAP | GMAW | 2.4 | 146 | 36-42 | 1.74 |
| WELD NO 12 | ROOT | SMAW | 3.2 | 100 | N/A | 1.30-1.78 |
| | FILL | SAW | 4.0 | 120 | 50-52 | 1.40-1.90 |
| | CAP | SAW | | 150 | 50-52 | |

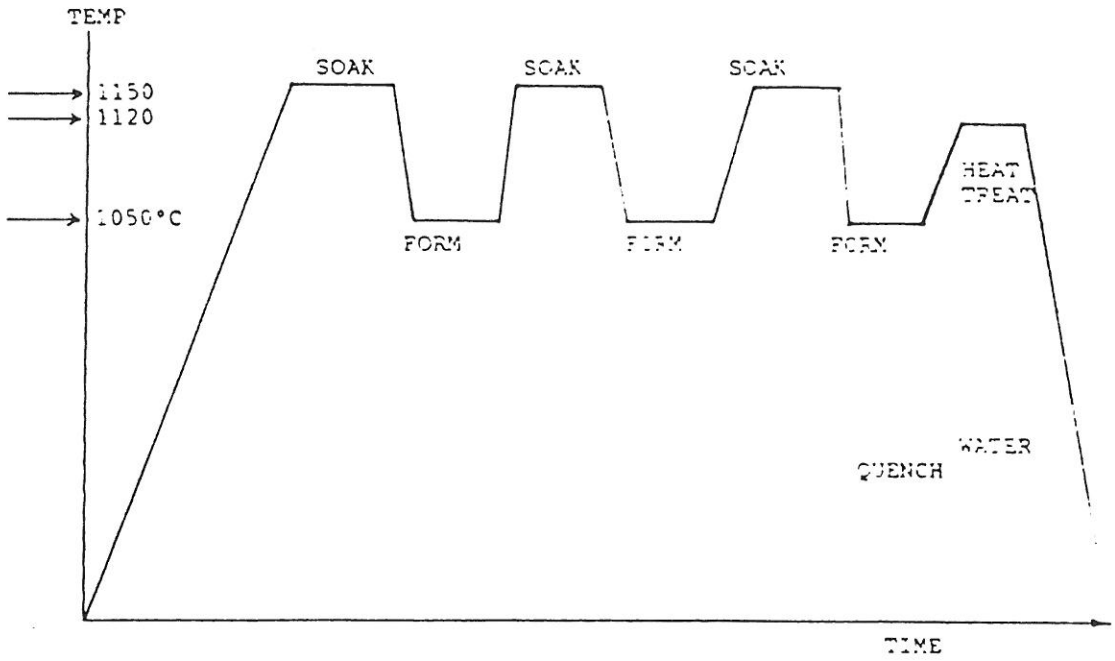


Fig. 1. — Forming and heat treatment operation.

from the cut face. Despite the fact that ZERON 100 is a high strength material, shells were satisfactorily formed by cold rolling on a 3 roll pyramid type roll and the shell was finished within tolerances.

Obviously an important aspect of the project was to evaluate the implications of attaching nozzles and plates to the fabricated vessel, this was achieved by welding forged ZERON 100 nozzles (items 4, 5, 6) onto the vessel at certain locations these are indicated in Appendix 1 along with the relevant weld preparation involved, shown in figure 2.

Dissimilar joints were evaluated by welding 13mm thick BS4360 Gr43A to the ZERON 100 shell. All the various stages of manufacture were witnessed by an independent third party witness as part of the programme to attain pressure vessel code accreditation.

In addition to the vessel two 2m test plates were fabricated using the 47mm thick plate refer to Appendix 1 for dimensions, the plate edge preparation was as shown in figure 2, Detail A.

### 5.3 Materials for Manufacture.

The two half shells and the dished end were manufactured from ZERON 100 (UNS S32760) 47mm thick rolled plate supplied by Fabrique de Fer (Belgium) in accordance with Weir Materials Limited specification MDS 12804/04. The chem-

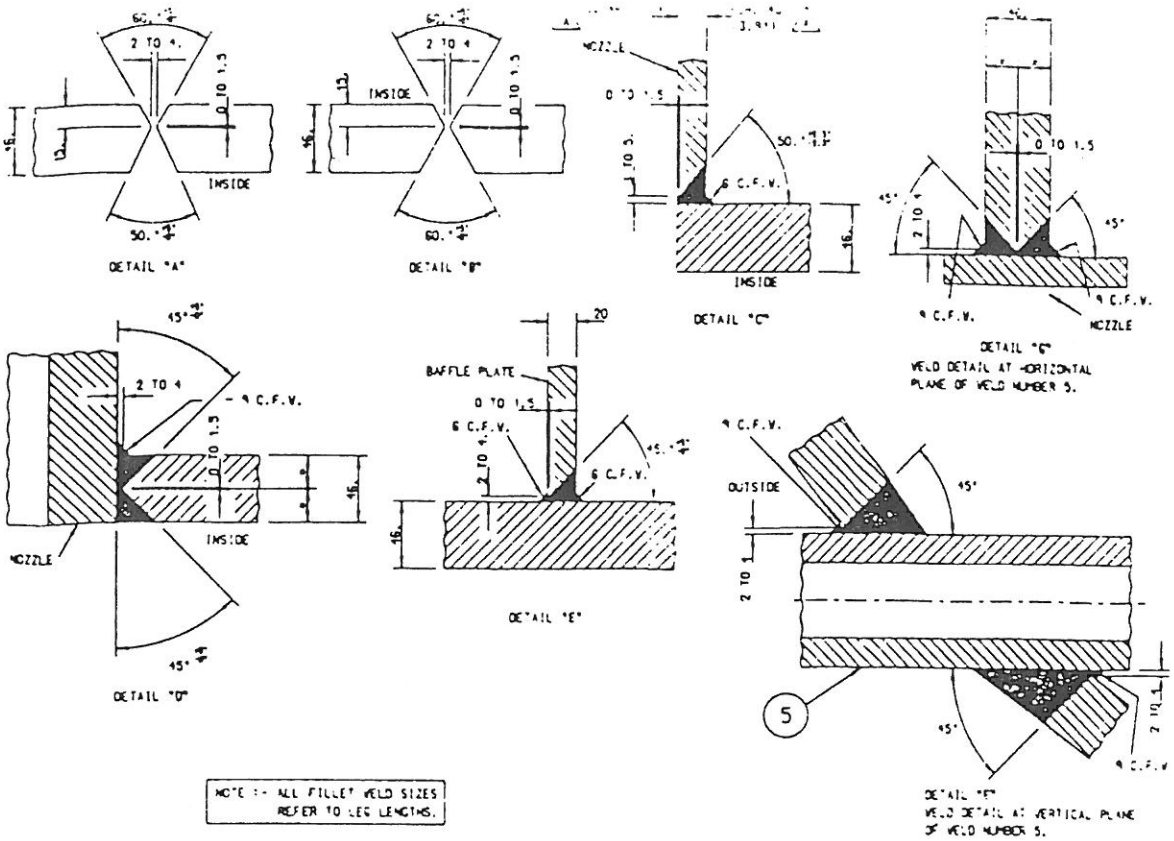


Fig. 2.

ical composition and mechanical properties of the plates are shown in tables 5 and 6 respectively. Also included are the chemical composition and mechanical properties of the plate material used for the test plate welds. The forged ZERON 100 nozzles were supplied in accordance with Weir Materials Limited specification MDS 12804/05, the chemical composition and mechanical properties are shown in tables 5 and 6.

In order to achieve the desired microstructure the "overalloyed" type welding consumables designated ZERON 100X were utilised for welding ZERON 100. Whilst for the dissimilar joint, and Inconel 182 consumable was used.

The all weld composition provided by covered electrodes together with the analysis of the solid wires used are shown in table 7.

## 6. Welding.

The figures in Appendix 1 show the geometry of the pressure vessel and also test

Table 5. — *Chemical composition of ZERON 100 components utilised for pressure vessel fabrication.*

| DESCRIPTION OF ITEM | ITEM NO | C | Si | Mn | S | P | Cr | Ni | Mo | Cu | W | N | PREN |
|---|---|---|---|---|---|---|---|---|---|---|---|---|---|
| DISHED END | 1 | 0.024 | 0.17 | 0.77 | 0.002 | 0.025 | 24.4 | 6.83 | 3.70 | 0.63 | 0.63 | 0.21 | 40.0 |
| BARREL PLATE | 2 | 0.024 | 0.17 | 0.77 | 0.002 | 0.025 | 24.4 | 6.83 | 3.70 | 0.63 | 0.63 | 0.21 | 40.0 |
| BARREL PLATE | 3 | 0.024 | 0.17 | 0.77 | 0.002 | 0.025 | 24.4 | 6.83 | 3.70 | 0.63 | 0.63 | 0.21 | 40.0 |
| FORGED NOZZLE 405mm od x 305mm id | 4 | 0.021 | 0.30 | 0.54 | 0.002 | 0.021 | 25.1 | 7.0 | 3.77 | 0.63 | 0.73 | 0.24 | 41.4 |
| STUB PIPE 100mm od x 50mm id | 5 | 0.016 | 0.35 | 0.61 | 0.002 | 0.025 | 24.7 | 7.2 | 3.58 | 0.63 | 0.69 | 0.22 | 40.0 |
| STUB PIPE 2" SCH40 | 6 | 0.016 | 0.35 | 0.61 | 0.002 | 0.025 | 24.7 | 7.2 | 3.58 | 0.63 | 0.69 | 0.22 | 40.0 |
| TEST PLATE 47mm | 10,11 | 0.024 | 0.17 | 0.77 | 0.002 | 0.025 | 24.4 | 6.83 | 3.70 | 0.63 | 0.63 | 0.21 | 40.0 |
| TEST PLATE 47mm | 12,13 | 0.024 | 0.17 | 0.77 | 0.002 | 0.025 | 24.4 | 6.83 | 3.70 | 0.63 | 0.63 | 0.21 | 40.0 |
| PLATE 19mm THICK | 7,9 | 0.024 | 0.17 | 0.77 | 0.002 | 0.025 | 24.4 | 6.83 | 3.70 | 0.63 | 0.63 | 0.21 | 40.0 |

Table 6. — *Mechanical properties of ZERON 100 components utilised for pressure vessel.*

| DESCRIPTION OF ITEM | ITEM NO | 0.2% PROOF STRENGTH | TENSILE STRENGTH | ELONGATION | HARDNESS | FERRITE | IMPACT TOUGHNESS @ -10°C |
|---|---|---|---|---|---|---|---|
| | | MPa | MPa | % | HB | % | J |
| DISHED END | 1 | 595 | 791 | 35 | 266 | 49 | 210 195 205 |
| BARREL PLATE | 2 | 556 | 785 | 35 | 265 | 46 | 220 210 224 |
| BARREL PLATE | 3 | 557 | 777 | 34 | 269 | 46 | 234 230 208 |
| FORGED NOZZLE 405mm od x 305mm od | 4 | 585 | 812 | 31 | 249 | 58 | 66 72 78 |
| STUB PIPE 100mm od x 50mm id | 5 | 608 | 783 | 36 | 255 | 60 | 203 217 214 |
| STUB PIPE 2" SCH40 | 6 | 608 | 783 | 36 | 255 | 60 | 203 217 214 |
| PLATE | 7,9 | 645 | 841 | 31 | 262 | 49 | 272 266 282 |
| TEST PLATE | 10,11 | 578 | 780 | 35 | 265 | 49 | 205 220 215 |
| TEST PLATE | 12,13 | 595 | 791 | 35 | 266 | 49 | 210 195 205 |

Table 7. — *Composition of consumables used.*

| SUPPLIER | | FORM | DIA mm | C | Si | Mn | S | P | Cr | Ni | Mo | Cu | W | N | Fe | PREN |
|---|---|---|---|---|---|---|---|---|---|---|---|---|---|---|---|---|
| METRODE | Z100XKS | COVERED ELECTRODE | 3.2 | 0.029 | 0.62 | 0.47 | 0.007 | 0.022 | 25.9 | 9.79 | 3.82 | 0.66 | 0.68 | 0.22 | REM | 42.02 |
| METRODE | Z100XKS | COVERED ELECTRODE | 4.0 | 0.024 | 0.58 | 0.41 | 0.006 | 0.021 | 25.6 | 9.93 | 3.72 | 0.63 | 0.69 | 0.23 | REM | 41.55 |
| METRODE | Z100XKS | COVERED ELECTRODE | 5.0 | 0.025 | 0.59 | 0.41 | 0.010 | 0.021 | 25.5 | 9.98 | 3.72 | 0.64 | 0.70 | 0.24 | REM | 41.62 |
| METRODE | Z100X | GTAW SOLID WIRE | 1.6 | 0.015 | 0.40 | 0.71 | 0.002 | 0.023 | 24.9 | 9.85 | 3.67 | 0.63 | 0.57 | 0.22 | REM | 40.53 |
| METRODE | Z100X | GTAW SOLID WIRE | 2.4 | 0.015 | 0.40 | 0.58 | 0.002 | 0.023 | 24.9 | 9.85 | 3.67 | 0.63 | 0.57 | 0.22 | REM | 40.53 |
| METRODE | Z100X | GTAW SOLID WIRE | 2.4 | 0.018 | 0.55 | 0.58 | 0.005 | 0.026 | 25.0 | 9.85 | 3.52 | 0.63 | 0.69 | 0.22 | REM | 40.14 |
| METRODE | Z100X | GMAW SOLID WIRE | 1.2 | 0.018 | 0.55 | 0.58 | 0.005 | 0.026 | 25.0 | 9.85 | 3.52 | 0.63 | 0.69 | 0.22 | REM | 40.14 |
| SMITWELD | Z100X | SAW SOLID WIRE | 2.5 | 0.018 | 0.55 | 0.58 | 0.005 | 0.026 | 25.0 | 9.85 | 3.52 | 0.63 | 0.69 | 0.22 | REM | 40.14 |
| HENRY WIGGIN | INCONEL 182 | COVERED ELECTRODE | 3.2 | 0.04 | 0.62 | 6.76 | 0.005 | 0.015 | 14.46 | 67.60 | - | - | - | - | | |

Table 8. — *Weld locations, welding process and additional comments.*

| WELD NO | ITEM NOS | POSITION | PROCESSS | WELD DETAIL | COMMENTS |
|---|---|---|---|---|---|
| 1 | 2,3 | LONGITUDINAL SEAM WELD 1 | SMAW/SAW | A | 500mm LONG REPAIR |
| 2 | 2,3 | LONGITUDINAL SEAM WELD 2 | SMAW/SAW | A | |
| 3 | 1,2,3 | CIRCUMFERENTIAL SEAM | | A | |
| 4 | 4,2 | 12" NB NOZZLE | SMAW | D | SIDE WALL AND ROOT DEFECTS INTRODUCED |
| 5 | 5,1 | 2" SET THROUGH NOZZLE IN HEAD | SMAW | F | SIDE WALL DEFECT INTRODUCED |
| 6 | 6,3 | 2" SET ON NOZZLE TO SHELL | GTAW/SMAW | C | ROOT DEFECT INTRODUCED |
| 7 | 7,3 | 20mm THICK ZERON 100 PLATE WRAPPER PAD TO SHELL | GMAW | 10mm LEG FILLET | |
| 8 | 8,7 | CARBON STEEL PLATE TO WRAPPER PLATE | SMAW | 6mm LEG FILLET | |
| 9 | 9,3 | BAFFLE PLATE TO SHELL | | | SIDE WALL DEFECT INTRODUCED 300mm FROM END |
| 10 | 10,11 | TEST PLATE | SMAW | A | |
| 11 | 12,13 | TEST PLATE | SMAW/SAW | A | |
| 12 | 1 | SEAM WELD ON DISHED END | SMAW/SAW | A | WELDED BY CEREC |

Table 9. — *Summary of testing programme.*

| WELD NO | TEST PLATE NO | POSITION | PROCESS(ES) | ALL WELD TENSILE | ELEVATED TENSILE | CROSS WELD | SIDE BEND | IMPACTS | MICRO | MACRO | CHEMICAL COMP. | HARDNESS | CORROSION |
|---|---|---|---|---|---|---|---|---|---|---|---|---|---|
| 2 | 1 | LONGITUDINAL SEAM WELD 2 | SMAW/SAW | 1 SAW | 1 | 1 | 2 | | 1 | 1 | | 1 | |
| 3 | 2 | CIRCUMFERENTIAL SEAM | SAW/SMAW | 1 SMAW | 1 | 1 | 2 | 1 SET SAW CAP ROOT MMA CAP | 1 | 1 | 1 | 1 | 1 |
| 3 | 3 | CIRCUMFERENTIAL SEAM | SAW/GTAW | 1 GTAW | 1 | 1 | 2 | 1 SET ROOT GTAW CAP | 1 | 1 | 1 | 1 | 1 |
| 12 | 4 | HEAD SEAM | SAW/SMAW | 1 SAW | 1 | 1 | | | 1 | 1 | | 1 | 1 |
| 1 | 5 | REPAIR LONGITUDINAL SEAM | SMAW | | | | | 1 SET ROOT REPAIR CAP | 1 | 1 | | 1 | 1 |
| 4 | 6 | 10" NOZZLE | SMAW | | | | | | 1 | 2* | 1 | 1 | 1 |
| 6 | 7 | 2" NOZZLE | GTAW/SMAW | | | | | | 1 | 2* | 1 | 1 | 1 |
| 7 | 8 | FILLET WELD EXTERNAL ZERON 100 TO ZERON 100 | GMAW | * 1 WITH INENTIONAL DEFECT 1 WITHOUT DEFECT | | | | | 1 | 1 | 1 | 1 | 1 |

plates. The various joint details are given in figure 2.

Table 8 summarises the location of weld, welding process, joint details and incidence of deliberately introduced defects for subsequent development of the NDT programme.

Obviously it is not possible for the purpose of this paper to include a copy of every weld procedure specification that was employed in the production of the vessel and test plates. Table 4 summarises the salient welding parameters.

## 7. Mechanical test results.

The test plate samples were removed from the vessel and allocated test plate numbers, 1-8. Table 9 summarises the actual testing programme undertaken on the test plates.

Tables 10-14 inclusively detail some of the test results obtained on the sections of weld metal taken from the vessel.

## 8. Corrosion testing.

The welds were subjected to corrosion testing in accordance with ASTM G48-76, Method A at a temperature of 37.5°C for a duration of 24 hours with the result that all welds were found to be satisfactory.

## 9. Fracture toughness programme.

ZERON 100 was not listed in BS5500, therefore, it was deemed necessary to implement a fracture toughness testing programme to validate the material.

50mm thick butt welds were provided for fracture toughness testing at the Welding Institute [3]. Manual metal arc and submerged arc test plates were evaluated. Fracture toughness tests were carried out at −30°C using a single specimen unloading compliance J R-curve procedure with non-sidegrooved specimens as specified in BS5762 [4]. The testing data was analysed to calculate values of crack tip opening displacement (CTOD) and the J integral. Table 15 gives the test results obtained.

Fitness for purpose analysis was implemented using BSI PD6493 (1980) [5] and CTOD data interpreted to BS5762. Defect tolerance assessment calculations were made.

A more than adequate safety factor on flaw size (>2.2) was established by comparing the critical CTOD value of 0.08mm with the minimum CTOD values obtained by testing, see table 16.

Therefore one can conclude that ZERON 100 weldments possessed sufficient fracture toughness to avoid the occurrence of unstable fracture for defect sizes at or below the minimum detectable level – see NDT section.

Table 10a,b. — *Tables showing mechanical test data for test plate n° 1 (weld n° 2).*

| TENSILE TESTS | | | | | |
|---|---|---|---|---|---|
| TYPE | 0.2% | T.S. | E.L. | R.O.A. | P OF F |
| | MPa | MPa | % | % | |
| JTTXW | N/A | 842 | N/A | N/A | PLATE |
| JTBXW | N/A | 853 | N/A | N/A | PLATE |
| AW | 640 | 896 | 22.5 | 30.0 | |
| 110°C | 655 | 848 | 30 | 53 | |

| HARDNESS SURVEY - HV10 KG | | | | | |
|---|---|---|---|---|---|
| | PM | HAZ | WELD | HAZ | PM |
| CAP | 266-268 | 283-294 | 279-294 | 276-285 | 285-286 |
| MID | 262-276 | 272-279 | 290-294 | 272-294 | 258-281 |
| CAP | 287-292 | 270-285 | 294-309 | 279-309 | 279-287 |

A plot of CTOD vs Charpy V notch impact results from weld metal and HAZ tests permitted tentative recommendations to be made regarding charpy energies to provide a minimum CTOD value of 0.08mm – see table 17.

## 10. NDT.

Development work at TWI investigated the behaviour of ultrasonic waves in 47mm thick ZERON 100. The test material comprised a 300mm length removed from SMAW test plates containing deliberately introduced defects. The investigation addressed measurement of sound velocities, attenuation and noise levels in parent material and weld metal. Angled shear waves were found to be unsuitable for ZERON 100 weld examination due to excessive noise levels. Attenuation measurements for both compression and shear waves demonstrated substantially greater values in the weld metal than in the parent steel. The attenuation was

Table 11,a,b. — *Tables showing the mechanical test results of test plate n°2 (weld n°3).*

| TENSILE TESTS | | | | | |
|---|---|---|---|---|---|
| TYPE | 0.2% PS | UTS | EI | ROA | P OF F |
| | MPa | MPa | % | % | - |
| JTTXW | N/A | 851 | N/A | N/A | PLATE |
| JTBXW | N/A | 874 | N/A | N/A | PLATE |
| AW | 720 | 960 | 17.5 | 45 | N/A |
| 110°C | 682 | 890 | 42 | 22 | N/A |

| HARDNESS SURVEY - HV10KG | | | | | |
|---|---|---|---|---|---|
| LOCATION | PM | HAZ | WELD | HAZ | PM |
| CAP | 266-268 | 270-281 | 285-292 | 279-283 | 270-279 |
| MID | 264-266 | 272-283 | 287-292 | 281-290 | 266-276 |
| CAP | 264-666 | 272-287 | 287-292 | 279-290 | 264-285 |

| IMPACT TESTS | | | | | | | |
|---|---|---|---|---|---|---|---|
| TYPE: CVN | | TEMP: -30°C | | SIZE: 10 x 10mm | | | |
| WM | JOULES | FL | JOULES | FL + 2 | JOULES | FL +5 | JOULES |
| TOPSA | 53 50 64 | FLTSA | 72 70 76 | FL+2TSA | 86 66 100 | +5TSA | 146 162 140 |

Table 12,a,b. — *Tables showing mechanical test data for test piece 3 (weld n°3).*

| TENSILE TESTS | | | | | |
|---|---|---|---|---|---|
| TYPE | 0.2% PS | UTS | EI | ROA | P OF F |
| | MPa | MPa | % | % | - |
| JTTXW | N/A | 851 | N/A | N/A | PLATE |
| JTBXW | N/A | 874 | N/A | N/A | PLATE |
| AW | 720 | 960 | 17.5 | 45 | - |
| 110°C | 647 | 933 | | 56 | - |

| HARDNESS SURVEY - HV10KG (RANGE) | | | | | |
|---|---|---|---|---|---|
| LOCATION | PM | HAZ | WELD | HAZ | PM |
| CAP | 260-266 | 266,285 | 287,290 | 274,285 | 264,272 |
| MID | 264,272 | 283,290 | 287,292 | 281,285 | 262,279 |
| CAP | 266,270 | 276,287 | 287,290 | 276,287 | 264,268 |

| IMPACT TESTS | | | | | |
|---|---|---|---|---|---|
| TYPE: CVN | | TEMP: -30°C | | SIZE: 10 x 10mm | |
| WM | | FL | | FL | |
| | JOULES | | JOULES | | JOULES |
| TOPx | 93,90,110 | FLTx | 89,110,86 | FL+5R+ | 170,136,140 |
| ROOT+ | 42,38,32 | FLR+<br>FL+2Tx<br>FL+5Tx<br>FL+2R+ | 48,54,48<br>64,72,55<br>159,113,115<br>98,66,76 | | |
| + ROOT GTAW + SMAW MIX x TOP GTAW ONLY | | | | | |

Table 13,a. — *Tables showing mechanical test data for test plate n° 4 (weld n° 12).*

| TENSILE TESTS | | | | | |
|---|---|---|---|---|---|
| TYPE | 0.2% PS | UTS | EI | ROA | P OF F |
| | MPa | MPa | % | % | - |
| JTT(1)xW | N/A | 816 | N/A | N/A | WELD |
| JTB(2)xW | N/A | 822 | N/A | N/A | WELD |
| AW | 595 | 832 | 35 | 60 | - |
| 110°C | 640 | 779 | 32 | 65 | - |

| HARDNESS SURVEY - HV10KG (RANGE) | | | | | |
|---|---|---|---|---|---|
| LOCATION | PM | HAZ | WELD | HAZ | PM |
| CAP | 270<br>276 | 264<br>270 | 256<br>270 | 268<br>279 | 266<br>274 |
| MID | 250<br>254 | 249<br>261 | 242<br>268 | 245<br>251 | 242<br>247 |
| CAP | 254<br>268 | 253<br>272 | 249<br>262 | 256<br>266 | 253<br>262 |

found to be less marked with 4 MHZ than with 2 MHZ probes.

In parallel with TWI ultrasonic test programme work progressed at major fabricator. Calibration blocks were prepared in ZERON 100 with 1.5 and 3mm diameter flat bottomed holes. A weld reference block was machined with 1.5mm dia holes located at varying depths along the fusion line. Satisfactory results were obtained with 4 MHZ twin crystal probes (45°, 60° and 70°) on main seam joints and also set on/set through nozzle joints. To provide full access for scanning it was necessary to remove weld reinforcement by grinding. The ultransonic procedures, which were developed, were found to be capable of detecting defects down to 1.5mm – detection capability was confirmed by sectioning and metallurgical examination after ultrasonic examination.

The advent of HIP material with relatively fine grain size facilitates ultrasonic

Table 14a,b. — *Tables showing the mechanical test results of test plate n°2 (weld n°3).*

| HARDNESS SURVEY - HV10KG | | | | | |
|---|---|---|---|---|---|
| LOCATION | PM | HAZ | WELD | HAZ | PM |
| CAP | 268<br>274 | 270<br>285 | 285<br>290 | 266<br>272 | 266<br>270 |
| MID | 264<br>281 | 285<br>287 | 290<br>294 | 283<br>285 | 264<br>285 |
| CAP | 266<br>272 | 279<br>287 | 287<br>294 | 283<br>287 | 266<br>270 |

| IMPACT TESTS | | | | | |
|---|---|---|---|---|---|
| TYPE: CVN | | TEMP: -30°C | | SIZE: 10 x 10mm | |
| WM | | | | | |
| | JOULES | | JOULES | | JOULES |
| TOP MR<br>ROOT MR | 29,28,26<br>56,46,38 | FL TMR<br>FL RMR<br>FLT 2MR<br>FLT 2MR | 59,52,66<br>60,72,68<br>98,88,94<br>72,68,69 | FLT 5MR<br>FLR 5MR | 142,98,131<br>88,100,100 |

examination of parent material. Work is currently underway at TWI to develop improved ultrasonic techniques for duplex stainless streels.

Appendix 2 summarises salient features of NDT techniques available for examination of ZERON 100 welded joints.

## 11. Conclusions.

During design and fabrication of the project vessel all procedures used were those that would be used for a maximum sized vessel and the successful conclusion of a fabrication by conventional techniques and the data generated by the project has

Table 15. — *J integral and CTOD test data.*

| TEST TEMPERATURE -30°C | | | CTOD VALUES TO BS5762 | |
|---|---|---|---|---|
| SPECIMEN | NOTCH POSITION | $J_{0.2(2)}$ (KJ/M²) | $\delta_u$ (mm) | $\delta_m$ (mm) |
| PLATE | PARENT STEEL | 200 | - | 1.159 |
| PLATE | PARENT STEEL | 250 | - | 0.938 |
| PLATE | PARENT STEEL | 600 | - | 0.965 |
| SMAW | WELD METAL NOTCH(1) | 85 | - | 0.196 |
| SMAW | WELD METAL NOTCH | 65 | - | 0.177 |
| SMAW | WELD METAL NOTCH | 50 | - | 0.188 |
| SMAW | HAZ SURFACE NOTCH | 90 | 0.082 | 0.338 |
| SMAW | HAZ SURFACE NOTCH | 75 | - | 0.195 |
| SMAW | HAZ SURFACE NOTCH | 60 | 0.058* | 0.209 |
| | | | 0.086 | |
| SAW | WELD METAL NOTCH | | - | 0.367 |
| SAW | WELD METAL NOTCH | 120 | - | 0.467 |
| SAW | WELD METAL NOTCH | 155 | - | 0.380 |
| SAW | HAZ SURFACE NOTCH | 100 | 0.031 | 0.276 |
| SAW | HAZ SURACE NOTCH | 100 | - | 0.905 |
| SAW | HAZ SURACE NOTCH | 100 | - | 0.228 |

*Two 'Pop-ins' observed

Note:- 1) HAZ specimens were B X B configuration all remaining test pieces were B x 2B specimen.

2) J evaluated at 0.2mm of central crack growth.

been assessed.

The project proves that vessels can be manufactured using super duplex stainless steels and these can be reliably non-destructively tested using dye penetrant, ultrasonic and radiographic techniques.

A corresponding programme of work conducted by The Welding Institute assessed the critical defect size which was found to give a factor of safety at least twice from that defect size which could be evaluated by ultrasonic means.

Similar analysis correlated charpy V notch impact toughness data with CTOD. It was found that at −30°C all weld metal and parent materials gave adequate toughness.

Detailed design work when comparing aganst traditional carbon steel clad materials gave weight savings of up to 37%. The extra cost of the super duplex stain-

Table 16. — *Calculation of factor of safety using CTOD values.*

| WELD TYPE | NOTCH POSITION | CTOD $\delta_M$ (MM) | FACTOR OF SAFETY $\delta_M/\delta_C$ |
|---|---|---|---|
| SMAW | WELD METAL | 0.196 | 2.45 |
| SMAW | WELD METAL | 0.177 | 2.21 |
| SMAW | WELD METAL | 0.188 | 2.35 |
| SMAW | HAZ | 0.338 | 4.23 |
| SMAW | HAZ | 0.195 | 2.44 |
| SMAW | HAZ | 0.209 | 2.62 |
| SAW | WELD METAL | 0.367 | 4.59 |
| SAW | WELD METAL | 0.467 | 5.84 |
| SAW | WELD METAL | 0.380 | 4.75 |
| SAW | HAZ | 0.276 | 3.45 |
| SAW | HAZ | 0.905 | 11.31 |
| SAW | HAZ | 0.228 | 2.85 |

Table 17. — *Charpy energy values to achieve minimum CTOD value of 0.08mm.*

| REQUIRED CHARPY ENERGIES (J) | | | | |
|---|---|---|---|---|
| TEMP °C | WELD METAL | | PARENT/HAZ | |
| | AVE | MIN(1) | AVE | MIN(1) |
| -30 | 17 | 14 | 32 | 26 |
| -20 | 19 | 15 | 36 | 29 |
| -10 | 20 | 16 | 41 | 33 |
| 0 | 22 | 18 | 46 | 37 |

(1) MINIMUM ENERGY IS DEFINED AS 80% OF THE AVERAGE ENERGY (I.E. AS STANDARD OFFSHORE PRACTICE

less steels can be offset by fabrication costs when thinner wall thicknesses are taken into account. There are further advantages of having a solid corrosion resistant material which can be assessed such as:

i) weight saving on support structures
ii) single material selection philosophy
iii) corrosion resistant external surface.

These can generate further downstream cost savings such as savings on support structure particularly offshore, and cost of external coatings for protection.

The project also showed that all weld procedures used for all weld processes and combinations of processes could be qualified to approved codes.

The environments where super duplex stainless steels are finding suitability are:

Offshore environments
Chemical Industries
Marine
Flue Gas Desulphurisation.

**Acknowledgements.**

The authors would like to thank the following companies for their contribution to making the project reach a successful conclusion:

| | |
|---|---|
| Fabrique De Fer Limited | Marathon Oil UK Limited |
| Metrode Products Limited | The Welding Institute |
| Lincoln Norweld | Whessoe Limited |
| NEI Derby Limited | Weir Group Plc |


**References**

[1] Communication on fabrication of Duplex Stainless Steel Pressure Vessels from Nooter Corporation, USA.
[2] Private communication with Midsund Bruk Limited, Norway, May 1988.
[3] TWI Report 28215/1/89 Fracture Toughness Testing of ZERON 100 duplex stainless steel, GE Hale and SJ Gorwood.
[4] BS5762: 1979 Method for cracking opening displacement (COD) testing, British Standards Institution.
[5] BSI PD 6493 (1980) "Guidance on some methods for the derivation of acceptance levels for defects in fusion welded joints".
[6] Fabrication of Vessels in Duplex Stainless Steels, The Norwegian Society of Engineers, Chr Wintermark.

## Appendix 1.

| WELD NO. | WELD DATA SHEET NO. | WELD DETAIL | COMMENTS | MECHANICAL TESTS |
|---|---|---|---|---|
| 1 | VOS/634350/01 | A | 300MM LONG REPAIR TO VOS/634350/05 | FROM REPAIR WELD |
| 2 | VOS/634350/01 | A | | FROM SEAM WELD |
| 3 | VOS/634350/02 & 03 | B | | FROM MMA AND TIG SECTIONS |
| 4 | VOS/634350/06 | C | SIDE WALL AND ROOT DEFECTS REQUIRED. * | FROM REPAIR AREA |
| | VOS/634350/08 | F AND G | SIDE WALL DEFECT REQUIRED. * | FROM REPAIR AREA |
| | VOS/634350/07 | C | ROOT DEFECT REQUIRED. * | FROM REPAIR AREA |
| 7 | VOS/634350/10 | 10 MM FILLET WELD | | FROM ANY POSITION |
| 8 | VOS/634350/11 | 6 MM FILLET WELD | | FROM ANY POSITION |
| 9 | VOS/634350/09 | E | | FROM ANY POSITION |
| 10 | VOS/634350/04 | A | ARTIFICIAL DEFECT TO BE INTRODUCED INTO END 300MM. * | TESTS AT THE WELDING INSTITUTE |
| 11 | VOS/634350/01 | A | | TESTS AT THE WELDING INSTITUTE |
| 12 | - | - | WELDED BY OPERC | FROM SEAM WELD |

* SEE WELDING DEPARTMENT FOR DETAILS.

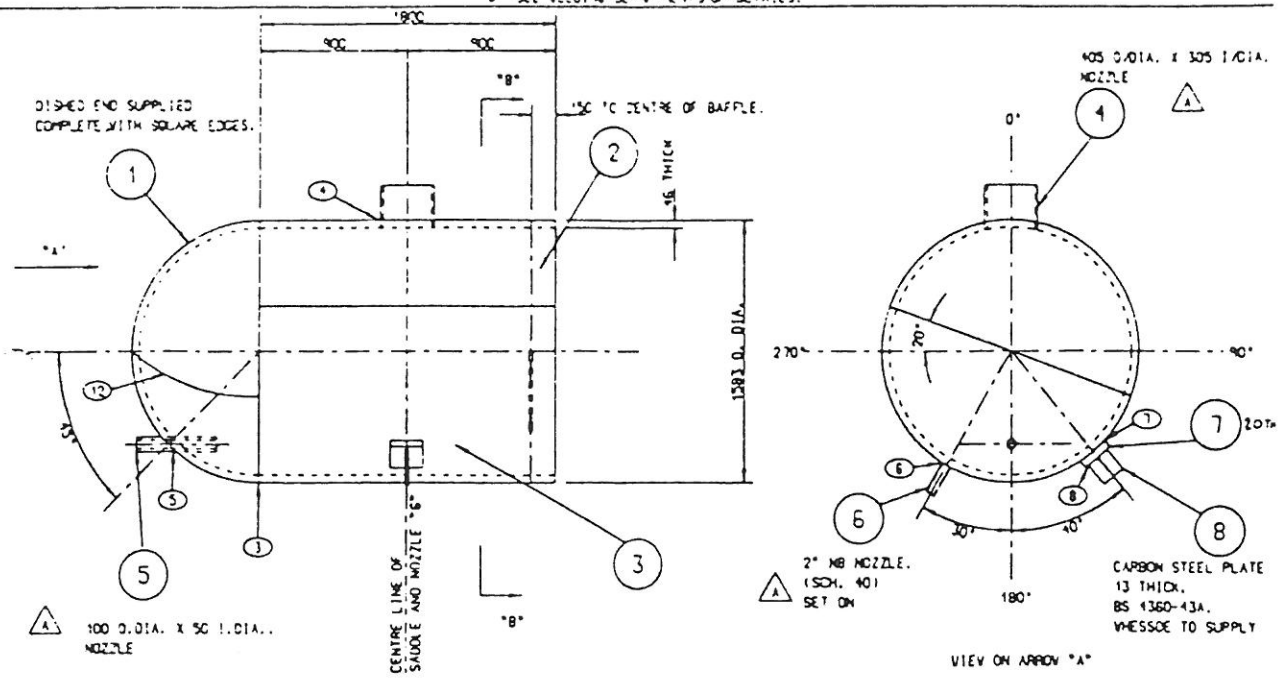


(A) ZERON 100 TEST MOCK UP VESSEL
1 - REQUIRED AS DRAWN.
MATERIALS FREE ISSUE, EXCEPT ITEM 8.
MATERIAL EXCEPT ITEM 8 IS ZERON 100.
ITEM 8 IS CARBON STEEL.
APPROX. WEIGHT OF BARREL AND HEMI-END ONLY IS 5.2 TONNES.

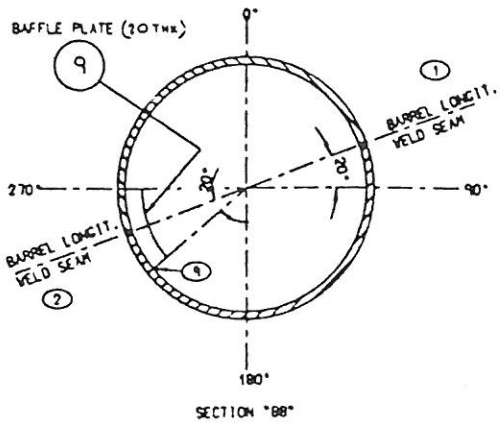


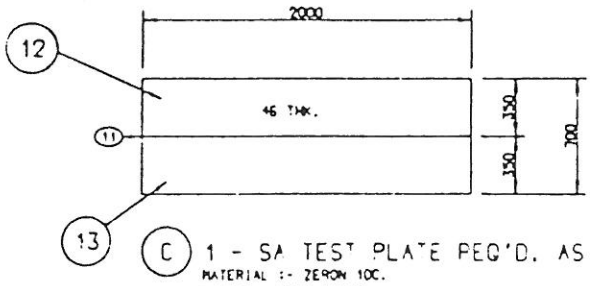


(C) 1 - SA TEST PLATE REQ'D. AS DRAWN.
MATERIAL :- ZERON 100.
MATERIAL FREE ISSUE.

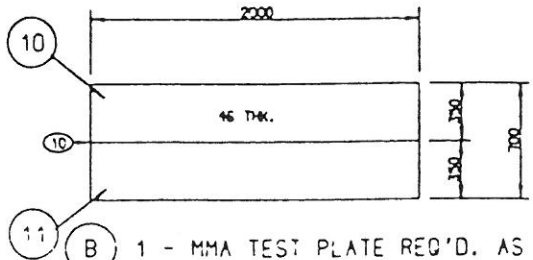


(B) 1 - MMA TEST PLATE REQ'D. AS DRAWN
MATERIAL :- ZERON 100.
MATERIAL FREE ISSUE

## Appendix 2.

### Ultrasonic examination.

1) Calibration blocks complying with BS3923 produced in ZERON 100 from the same process route to that being examined.
2) Design to allow NDT.
3) Weld reinforcement dressed flush to allow satisfactory testing.
4) Angled compression probes:

| | | |
|---|---|---|
| 45° twin refracted compression probe | – | effective scanning zone 20mm to 50mm deep. |
| 60° twin refracted compression probe | – | effective scanning zone 10mm to 35mm deep. |
| 70° twin refracted compression probe | – | effective scanning zone 5mm to 20mm deep. |
| 90° creeping wave probe | – | effective scanning zone 0 to 10mm deep. |

5) Sensitivity – DAC + 8 DB.
6) Acceptance criteria:

| | | |
|---|---|---|
| > 20% DAC reflectors : | – | plot out and evaluate for defect type as per BS3923 |
| If planar defects | – | reject |
| If volumentric defecs | – | report at 50% DAC at 100% DAC evaluate against BS5500 acceptance criteria. |

### Radiographic examination.

1) X-rays used.
2) Agfa D4 film or equivalent.
3) Lead screen.
4) Procedure in accordance with BS2910 and BS2600.

### Dye penetrant examination.

In accordance with BS6443.

i) weight saving on support structures
ii) single material selection philosophy
iii) corrosion resistant external surface.

These can generate further downstream cost savings such as savings on support structure particularly offshore, and cost of external coatings for protection.

The project also showed that all weld procedures used for all weld processes and combinations of processes could be qualified to approved codes.

The environments where super duplex stainless steels are finding suitability are:

Offshore environments
Chemical Industries
Marine
Flue Gas Desulphurisation.

**Acknowledgements.**

The authors would like to thank the following companies for their contribution to making the project reach a successful conclusion:

| | |
|---|---|
| Fabrique De Fer Limited | Marathon Oil UK Limited |
| Metrode Products Limited | The Welding Institute |
| Lincoln Norweld | Whessoe Limited |
| NEI Derby Limited | Weir Group Plc |


**References**

[1] Communication on fabrication of Duplex Stainless Steel Pressure Vessels from Nooter Corporation, USA.
[2] Private communication with Midsund Bruk Limited, Norway, May 1988.
[3] TWI Report 28215/1/89 Fracture Toughness Testing of ZERON 100 duplex stainless steel, GE Hale and SJ Gorwood.
[4] BS5762: 1979 Method for cracking opening displacement (COD) testing, British Standards Institution.
[5] BSI PD 6493 (1980) "Guidance on some methods for the derivation of acceptance levels for defects in fusion welded joints".
[6] Fabrication of Vessels in Duplex Stainless Steels, The Norwegian Society of Engineers, Chr Wintermark.

## Appendix 1.

| WELD NO. | WELD DATA SHEET NO. | WELD DETAIL | COMMENTS | MECHANICAL TESTS |
|---|---|---|---|---|
| 1 | VDS/634350/01 | A | 300MM LONG REPAIR TO VDS/634350/05 | FROM REPAIR WELD |
| 2 | VDS/634350/01 | A | | FROM SEAM WELD |
| 3 | VDS/634350/02 & 03 | B | | FROM MMA AND TIG SECTIONS |
| 4 | VDS/634350/06 | C | SIDE WALL AND ROOT DEFECTS REQUIRED. * | FROM REPAIR AREA |
| | VDS/634350/08 | F AND G | SIDE WALL DEFECT REQUIRED. * | FROM REPAIR AREA |
| | VDS/634350/07 | C | ROOT DEFECT REQUIRED. * | FROM REPAIR AREA |
| 7 | VDS/634350/10 | 10 MM FILLET WELD | | FROM ANY POSITION |
| 8 | VDS/634350/11 | 6 MM FILLET WELD | | FROM ANY POSITION |
| 9 | VDS/634350/09 | E | | FROM ANY POSITION |
| 10 | VDS/634350/04 | A | ARTIFICIAL DEFECT TO BE INTRODUCED INTO END 300MM.* | TESTS AT THE WELDING INSTITUTE |
| 11 | VDS/634350/07 | A | | TESTS AT THE WELDING INSTITUTE |
| 12 | - | - | WELDED BY OPER | FROM SEAM WELD |

* SEE WELDING DEPARTMENT FOR DETAILS.

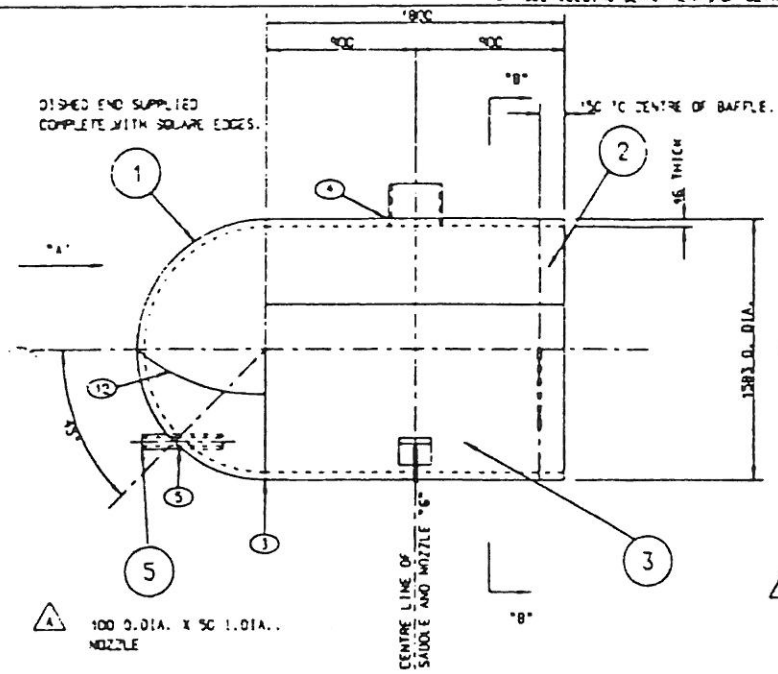


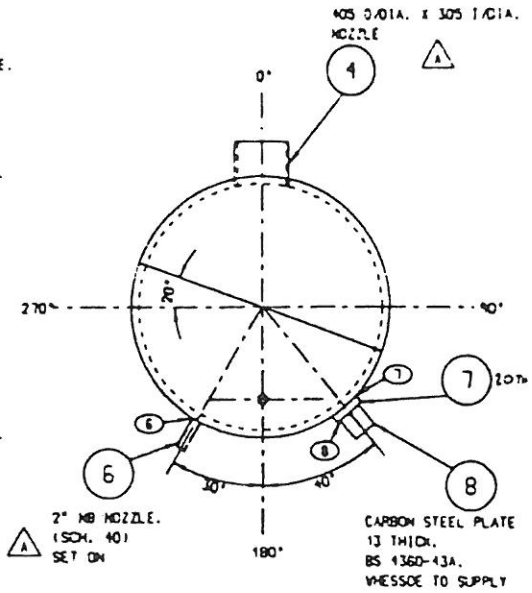


VIEW ON ARROW "A"

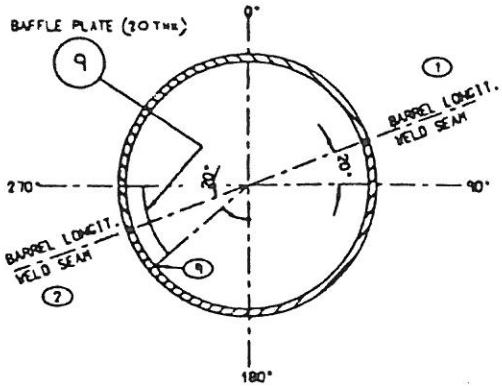


SECTION "BB"

(A) ZERON 100 TEST MOCK UP VESSEL
1 - REQUIRED AS DRAWN.
MATERIALS FREE ISSUE, EXCEPT ITEM 8.
MATERIAL EXCEPT ITEM 8 IS ZERON 100.
ITEM 8 IS CARBON STEEL.
APPROX. WEIGHT OF BARREL AND HEMI-END ONLY IS 5.2 TONNES.

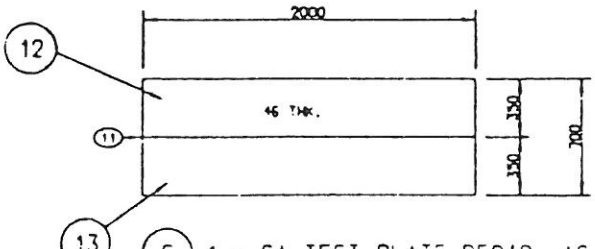


(C) 1 - SA TEST PLATE REQ'D. AS DRAWN.
MATERIAL :- ZERON 100.
MATERIAL FREE ISSUE.

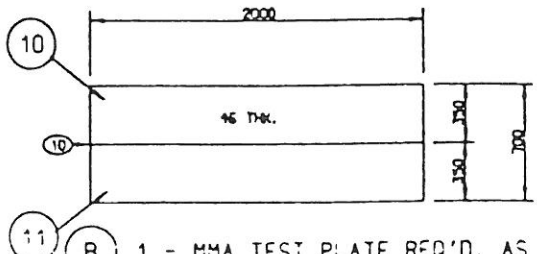


(B) 1 - MMA TEST PLATE REQ'D. AS DRAWN
MATERIAL :- ZERON 100.
MATERIAL FREE ISSUE

## Appendix 2.

### Ultrasonic examination.

1) Calibration blocks complying with BS3923 produced in ZERON 100 from the same process route to that being examined.
2) Design to allow NDT.
3) Weld reinforcement dressed flush to allow satisfactory testing.
4) Angled compression probes:

| | | |
|---|---|---|
| 45° twin refracted compression probe | – | effective scanning zone 20mm to 50mm deep. |
| 60° twin refracted compression probe | – | effective scanning zone 10mm to 35mm deep. |
| 70° twin refracted compression probe | – | effective scanning zone 5mm to 20mm deep. |
| 90° creeping wave probe | – | effective scanning zone 0 to 10mm deep. |

5) Sensitivity – DAC + 8 DB.
6) Acceptance criteria:

| | | |
|---|---|---|
| > 20% DAC reflectors : | – | plot out and evaluate for defect type as per BS3923 |
| If planar defects | – | reject |
| If volumentric defecs | – | report at 50% DAC at 100% DAC evaluate against BS5500 acceptance criteria. |

### Radiographic examination.

1) X-rays used.
2) Agfa D4 film or equivalent.
3) Lead screen.
4) Procedure in accordance with BS2910 and BS2600.

### Dye penetrant examination.

In accordance with BS6443.